stahl-electronics.com

HS-2000

Fast Low Noise High Voltage Switch

HS-2000_User_Manual_1_21doc
04. June 2020

Data Sheet & User Manual

Rev. 1.21

Applications:

- **Ion Pulsing / Electrode Switching**
- **Piezo-Driver**

Features:

- **fast and low noise switch (SPDT, push-pull)**
- **max. 2000V switching voltage**
- **TTL/CMOS level control**
- **floating up to 2000V vs. GND**

Typical Application:

Creation of short 2kV-Pulses

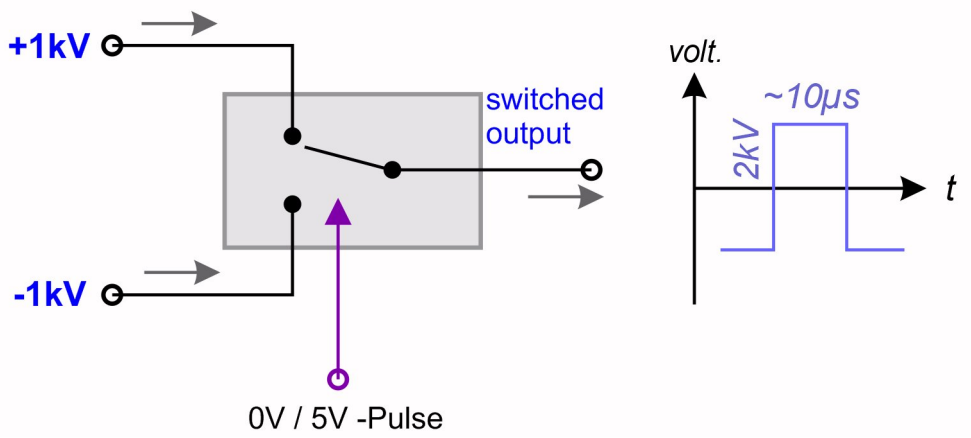

TABLE OF CONTENTS

1. Safety Hints …… 3

2. General Information and Overview…….. 4
   2.1 Purpose and Description of the Device…….. 4
   2.2 Functional Principle and Block Diagram……. 4
   2.3 Device Variety…… 5

3. Installation ……..… 6

   3.1 Mechanical and Electrical Installation…… 6

4. Operation and Control Elements …….. 7

   4.1 Elements on the front plate…… 7
   4.2 Elements on the rear side..…… 7
   4.3 Output Characteristics…… 8

5. Maintenance……. 10

6. Specifications……. 10

www.stahl-electronics.com phone: +49 6242-9134266, fax: +49 32123 504884

1. Safety Hints

Read all installation, operation, and safety instructions	Prior to operation, thoroughly review all safety, installation, and operating instructions accompanying this equipment.
Rear side switch turns device completely off	If the device is not in use for a longer time, it is recommended to turn the mains switch at rear side off.
This equipment must be connected to an earth safety ground	This product is grounded through the grounding conductor of the power cord. To avoid electrical hazard, the grounding conductor must be connected to protective earth ground.
Do not modify the unit	Do not make electrical or mechanical modifications to this unit.
Change cabling only when device is off	Changing the cabling, when voltages are present at the outputs can lead to formation of harmful sparks.
Do not operate in wet/damp conditions	To avoid electric shock hazard, do not operate this product in wet or damp conditions. Protect the device from humidity and direct water contact.
Beware of external magnetic fields	External magnetic fields can impair, damage or even destroy this device. A maximum external field strength of no more than B = 5mT is admissible. Having placed the device at any time into an external magnetic of bigger B = 5mT (regardless if power was turned on or off) can lead to severe overheating of the device and severely increased hazard of fire.
Service is to be performed by qualified service persons only	All servicing on this equipment must be carried out by factory-qualified service personnel only.
Do not block chassis ventilation openings, avoid dusty or dirty environments	Slots and openings in the chassis are provided for ventilation purposes to prevent overheating of the equipment. All case vents should continuously be cleared, in order to prevent overheating. Avoid excessive amounts of dust or dirt particles intruding the device, since they could cause malfunctions and increase the hazard of fire due to internal sparking or overheating.
Operate carefully with respect to risk of electrical shock	This device can produce high voltages at its output lines, which are harmful in case of direct touch with the human body or other external circuitry. Care must be taken to avoid unintentional touching of any output line to the human body or any devices which might be endangered by high voltages.
Routinely cleaning from dust	After long operation, or operation in a dusty environment it is strongly recommended to have the internal parts of the device cleaned by the manufacturer, or an appropriately qualified workshop in order to reduce the hazard of overheating.
No outdoor operation	Outdoor operation of the device is not admissible.

2. General Information and Overview

2.1 Purpose and Description of the Device

Purpose of the HS series devices is the fast switching of electrodes, electrostatic lenses, beam deflectors, piezo elements or ion traps. Unlike DC *power* switches, the outputs expect capacitive loads. The outputs are optimized for high stability and very low noise. The HS series switches are housed in standard 19-inch rack-mount cases. They are available in single-channel or dual-channel versions. In the dual channel version two completely identical switched are housed inside the same housing. These two switches are completely independent.

fig 2.1: front view (DUAL version)

2.2 Functional Principle and Block Diagram

The following scheme displays a block diagram of the internal structure and illustrates the functional principle. The control input (BNC socket on front plate) defines the position of the internal high voltage switch, which connects either input A or input B to the output. A digital signal (TTL/CMOS level 0V/5V) may be applied to this control input at a rate between 0Hz (static operation possible) to 200Hz. A manual switch on the front side furthermore allows to override the digital control signal. The high voltage switching elements inside the device are implemented as MOSFET-transistors, allowing fast switching transitions in the order of 100ns.

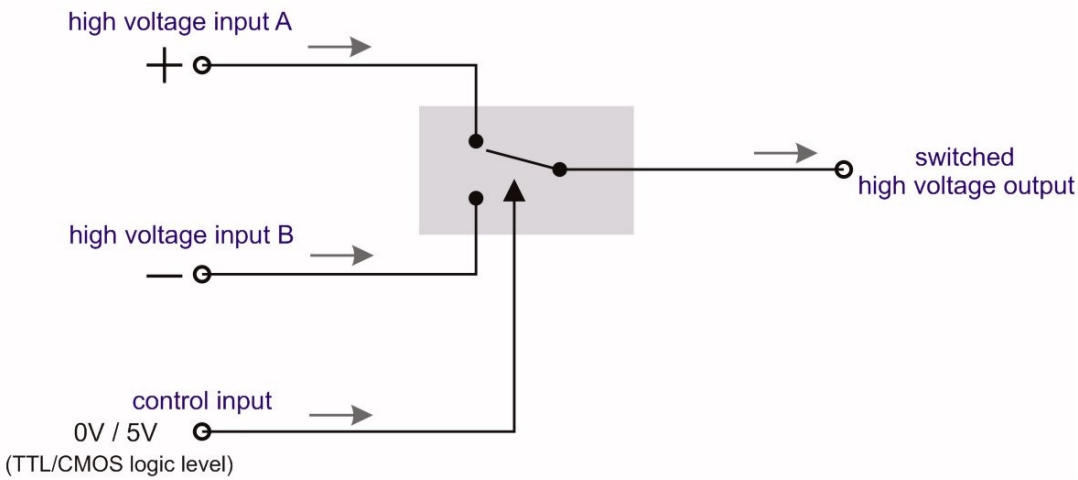

fig 2.2: Block diagram of a HS-2000 device. Inside the DUAL version, this circuit scheme exists twice, i.e. there are two independent switches.

Unlike high voltage pulse-generators the internal switch circuitry is implemented as fast static switch, which means that the applied control input level defines the (static) switch position as illustrated in the

scheme above. The output is connected to the selected input by a (transistor based) resistor. The non-selected input is isolated from the output by a high isolation resistance.
Note that the applied supply voltages at inputs A and B must obey a certain order: voltage at input A always needs to be more positive than voltage at input B. In general both input voltages may float up to +/-2000V versus the case ground, the voltage *difference* (A-B) must never exceed 2000V.

Application example:
Generation of 10µs-duration positive 2000 Volt-pulse

The subsequent oscilloscope screen shot shows a typical application example. A control pulse of logic levels (lower trace) is applied to the control input. At the high voltage inputs A and B, an external voltage of 0V and +2000V respectively is being applied. At the edges of the control signal the switch is triggered, and switches from 0V to +2000V and after 20µs back. A rectangular pulse results with steep slopes and almost constant static voltage levels.

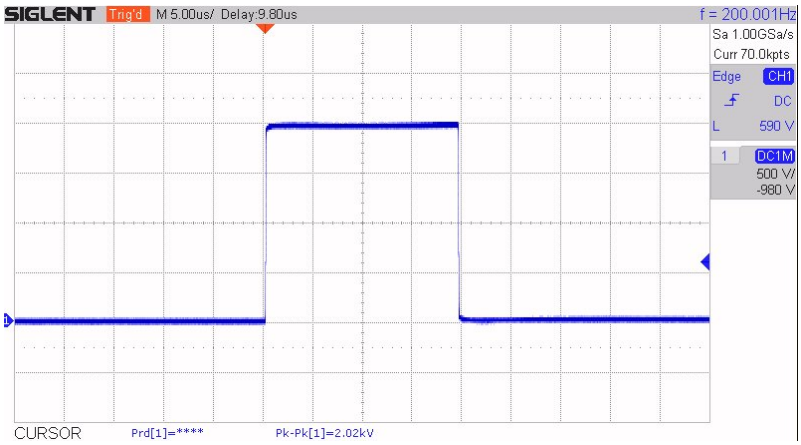

fig 2.3: Oscilloscope screen shot of a positive 2000V pulse, Δt = 20µs duration; load: approx. 20pF.

2.3. Device Variety

The following devices are currently members of the HS series device family:

HS-200	single or dual version	Output voltages of maximum 200V span[1)]
HS-500	single or dual version	Output voltages of maximum 500V span[1)]
HS-1000	single or dual version	Output voltages of max. 1000V span[1)]
HS-2000	single or dual version	Output voltages of max. 2000V span[1)]

The devices with outputs up to 500V (vs. GND) are provided by default with BNC outputs at their rear side, the other variants with higher voltages have SHV connectors. Voltages are referenced to case ground.

Note [1)]: span is the maximum voltage difference between positive and negative inputs A and B.

3. Installation

3.1. Mechanical and Electrical Installation

Positioning: Provide sufficient air cooling of the device and locate in normal horizontal position to allow for defined air convection. Rack mounting into a standard 19" rack is as well possible as resting the device on a table. If mounted in a rack, please make sure that all case vents are permanently cleared (rear side), in order to prevent overheating. Avoid excessive amounts of dust or dirt particles intruding into the device.

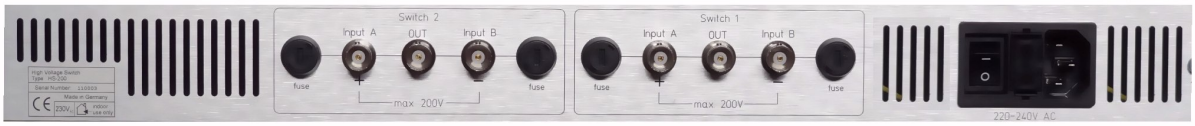

fig. 3.1: Keep air vents on rear side always cleared to ensure sufficient ventilation

Beware of external magnetic fields:
Strong external magnetic fields can impair, damage or even destroy this device (e.g. proximity to a superconducting magnet). A maximum external field strength of no more than B = 5mT is admissible. Not observing this important condition can lead to severe overheating of the device and increases the hazard of fire.

Connecting to mains power:
Connect the device to the mains power supply (either 100 to 120V or 220 to 240V ac, as indicated on rear side) by using an appropriate power cord, being properly wired and providing a grounded outlet. The power cord should be rated to 2A current. The mains power input is **not** wide-range rated, either 100…120V or 220…240V need to be connected.

Cabling of voltage outputs:
Always provide appropriate and safe cabling when connecting the device to other devices or vacuum/experimental setups. Cabling is preferred using high voltage cable with proper shielding. BNC or SHV connector cables are a suitable choice in order to ensure proper shielding against external noise pickup and in order to provide protective ground for safety reasons. Always be aware about the potential hazard of high electrical voltages to human beings and sensitive objects of all kind (see also safety hints in section 1).

Please note that wiring should only be done when the device and external high voltage supplies are turned off. Connecting a powered-up output to external circuitry can easily cause sparks and electrical discharges. The resulting overvoltages can severely and permanently damage the device itself and also external circuitry.

4. Operation and Control Elements

4.1 Elements on the front plate

mains supply switch

Switch 1 BNC ext. / manual

Switch 2 BNC ext. / manual

fig. 4.1: front plate elements (2-channel version shown)

The front plate contains the control elements of the device. It is powered up after turning on the rear-side mains supply switch and also the power button on the front plate. The Power-on-LED (green) indicates proper operation of the internal circuitry.

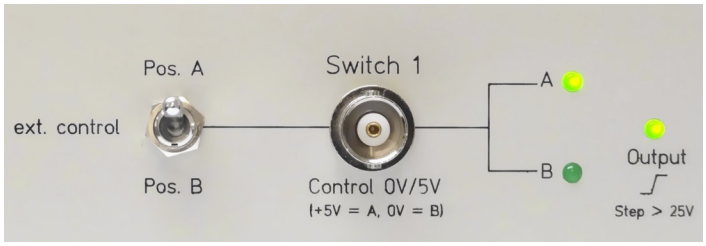

fig. 4.2: manual switch, BNC input and LED indicators, showing the switch position and indicating operation (voltage step detector) .

Each channel features a three-position manual switch (fig. 4.2). In upper position the output (rear side) is connected to the high voltage input A, moved into lower position it connects the output to input B. In center position, the control voltage applied to the BNC input, defines the switch state. A high level connects the output with A, low level to B. Standard 5V / 0V signal may be applied to this control input. In practical cases a PC controlled Delay-Gate generator or function generator is often connected here. Switching rates up to 200Hz are supported. The LED indicators on the right hand side show the switch status, indicating which input (A or B) is connected to the output. HS series switch devices after production date dec. 2017 feature also a slope/step detector, which LED lights up upon occurence of positive or negative output steps larger approx. 50V, thus indicating correct functionality.

4.2 Elements on the rear side

fig. 4.3: rear side elements (a dual channel version is shown)

The rear side of the device contains the ventilation elements, 110V / 230V supply connector, power on/off switch (with fuses) and the high voltage inputs and outputs.

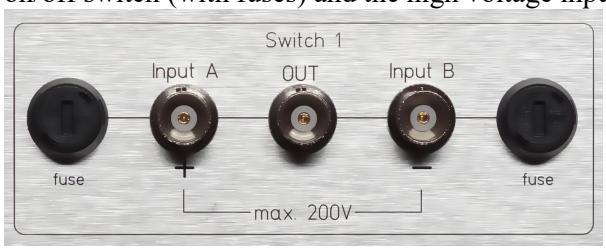

fig. 4.4: BNC sockets for at inputs and output; both inputs A and B are over-current protected (replaceable fuse: 63mA)

Fig. 4.4 shows the BNC sockets for the high voltage DC input voltages A and B and the switch output OUT. Please note that the voltage on input A needs to be more positive compared to the voltage on

input B. This is indicated by the plus and minus sign "+" and "-". In general, both input voltages may reside in the range between -2000V and +2000V versus GND, note that their difference **must never** exceed 2000V. The fuse sockets shown in fig. 4.4 contain safety fuses for the two high voltage inputs. In case extensive currents flow, they may blow. Nominal rating is 63mA Ampere, fast blow.

The inputs A and B can be connected to an appropriate high voltage supply, e.g. to a device of *stahl-electronics* HV-series. The output is supposed to be connected to capacitive load like switched electrode, piezo element or ion trap. Note that excessive capacitive loads impair the switching speed performance. Nominal loads from 0pF to 300pF can be connected (max. 1.5nF), see next section for waveforms.

4.3 Output Characteristics

Dynamic Response

As soon as the internal switch connects either input A or B to the output, the latter assumes the voltage of the respective input. There is a time constant related to each voltage transition, essentially given by the internal switch resistance (approx. 500 Ω), the internal output current limit (approx. ±400mA) and the capacitive load on the output, including all cables to an experimental setup. In case of BNC cable (typically RG58 type) one may count about 100pF each meter cable length, therefore extensively long cables should be avoided.

The following oscilloscope screen shots show voltage step transitions observed at the output with small (17pF) and medium capacitive loads (100pF, 300pF), for further illustration.

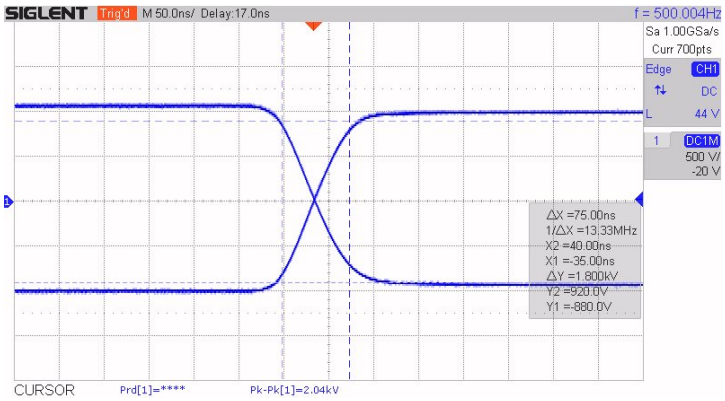

fig. 4.5 positive and negative voltage step of 2000V with small capacitive load (C = 17pF) at the output, transient rise time (10% to 90% of voltage step size) is in the order of 75ns in each case (grid: 50ns/div).

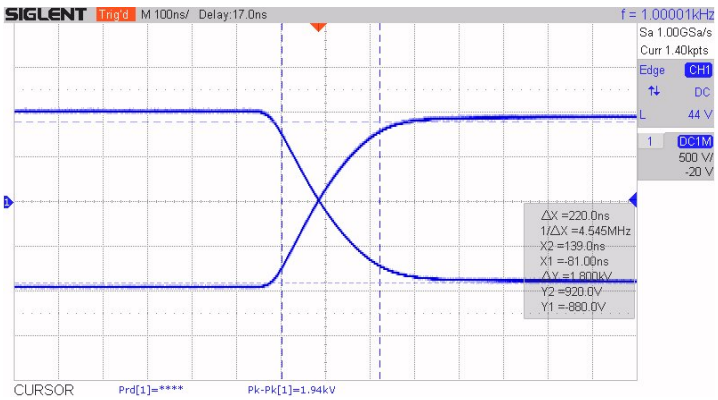

fig. 4.6 positive and negative voltage step of 2000V with medium capacitive load (C = 100pF), corresponding to about 1m of standard SHV cable (RG58) or 2m of low-capacitance cable; transient rise time (10% to 90%) is about 200ns each (grid: 100ns/div).

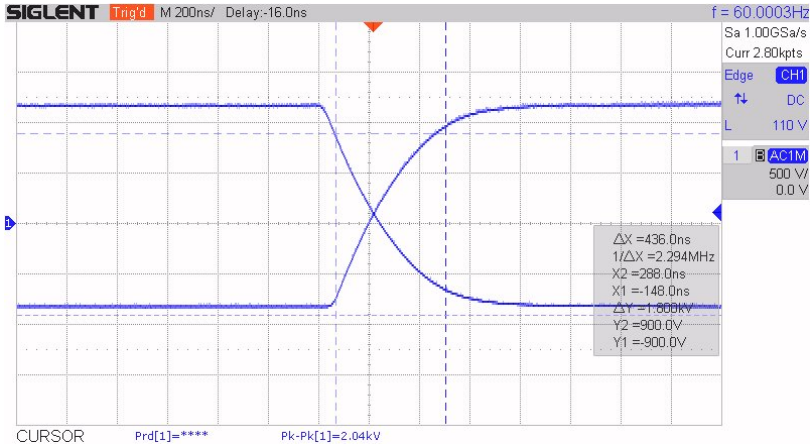

fig. 4.7 positive and negative voltage step of 2000V with large capacitive load (C = 300pF) at the output, corresponding to about 3m of standard SHV cable (RG58) or 6m of low-capacitance cable; transient rise time (10% to 90%) is about 430ns each.

In contrast to other devices, based on switched circuit / power switching technology, the HS series devices feature a remarkably low noise level. This makes them specially suited for ion traps, ion sources and low energy beam line applications. Each output exhibits a very low broadband noise (DC to 20MHz) of smaller than 350µV_{rms} and a low ripple level (50Hz) smaller 50µV_{rms}. The outputs are free of parasitic switching spikes, in contrast to competitor devices.

Floating Voltage

As mentioned above may the two input voltages float versus the case ground. The maximum admissible voltage is limited by the occurrence of excessive leakage currents and sparking. The HS-2000 device is rated for a permanent voltage of 2000V (positive or negative) versus the case gound. During factory commissioning a test voltage of 2100V is applied, typically a leakage current of 100nA is measured.

Static Switch Behaviour

In case of low-frequency or static operation, the 'on'-state serial resistance of input A or B to OUT amounts to approx 500 Ohms, and increases to larger approx. 5 MOhm in the 'off' state.

5. Maintenance

The HS series high voltage switches are designed for years of reliable operation. Under normal operating conditions, they should not require electrical maintenance, except routine cleaning of dust. If any question should arise, please contact the manufacturer.

Routine cleaning

All ventilation openings should be checked periodically and kept free of dust and other obstructions. A vacuum cleaner may be used to clean these vents when the unit is powered off. The front panel may be cleaned periodically with a clean cloth and mild alcohol solution, when the unit is powered off. It is recommended to send the device to the manufacturer routinely in 5-year intervals for internal cleaning from dust.

Fire hazard

Please note, that excessive accumulation of dust inside the case of the device can lead to overheating. This, together with possible discharges increases the risk of fire, caused by electrical sparks. Routinely cleaning the device from dust minimizes this risk. It is therefore recommended to send the device to the manufacturer routinely in 5-year intervals for internal cleaning from dust, or to have it cleaned by an accordingly qualified electronical workshop. Ambient conditions containing oil mists (e.g. in proximity to a vacuum pump or mechanical machines) place a severe danger, since inflammable substances could enter the device through the ventilation holes. If in doubt, cleaning by an accordingly qualified electronical workshop or the manufacturer is strongly recommended.
An increased hazard of fire may also occur if the device has been (permanently or temporarily) located in proximity to a strong (e.g. superconducting) magnet. A maximum external field of B = 5mT is admissible.

6. Specifications

Control Input			
	typ.	max.	Conditions and remarks
required drive level	0V and 5V	-2V to +6V vs. GND	Input is COMS/TTL compatible
threshold	2.4V		
input impedance	2kΩ // 6pF		
drive rate / switching rate	DC to 100Hz	200Hz	output pulse length greater or equal 10µs; for shorter pulses apply rate max. 150Hz
Output Switch, static			
static resistance from A or B to OUT "on"-state	500Ω	750Ω	I_{OUT} < 100mA
isolation resistance from A or B to OUT	>5MΩ		voltage differences from A or B to OUT smaller or equal 2000V
leakage currents from A or B to OUT	100nA*	400nA*	voltage differences from A or B to OUT smaller or equal 2000V
intrinsic switch capacitance on OUT terminal	55pF		
Noise		350µV_{rms}	
admissible DC current (continuous)		55mA	
admissible pulsed current		1.0A	Δt < 1.5ms, repetition rate <= 2 Hz

www.stahl-electronics.com phone: +49 6242-9134266, fax: +49 32123 504884

	typ.	max.	
Dynamic Behaviour			
delay from control input change to output reaction	200ns		200V output step size (positive or negative going)
delay jitter	3 ns rms		T = 25°C +/-1°C
max. pulse duration		infinite	
min. pulse duration	6.6µs 1.0µs on request		
Output rise or fall time, 10% to 90% step size, at 2kV voltage step	75ns		capacitive load of 17pF (probehead)
	200ns	250ns	capacitive load of 100pF
Max. capacitive load on output		500pF	value should not be exceeded for proper device performance
Input Voltage Rating			
Input A or B vs. GND		+/-2000V	both polarities may be applied vs. GND
Voltage difference from A to B		2000V	input A always needs to be on more positive level with respect to B
Fuse rating	63mA, fast		fuse replaceable on rear side
Environmental Conditions			
Magnetic Field		max. 5 mT	Maintain appropriate distance to strong magnets
Storage Temperature		-55 C° to +85 C°	
Operating Humidity & Temperature	noncondensing relative humidity up to 95% between temperatures of +10°C and +35°C. Outdoor operation of the device is not admissible.		
Power Supply	AC input voltage exclusively 110VAC, or 230V_{AC} at 50Hz to 60Hz. The power entry module is EMI/RFI-filtered. Fuse: medium fast blow 0.1A Note: Supply voltage needs to be defined at time or ordering.		
Power Consumption	typ. 4.5W		
Case dimensions	19.00” wide x 10” deep x 1 height unit. Front-panel mounting holes are configured for M6 rack configurations weight approximately 1.2kg		

Note *): Inputs A and B feature 500 MΩ resistors to ground for protection aginst parasitic charge up.
Currents through these protection resistors add to the numbers mentioned above.

DECLARATION OF CONFORMITY

Manufacturer's Name: **Dr. Stefan Stahl**
- Electronics for Science and Research -

Manufacturer's Address: **Dr. Stefan Stahl**
Kellerweg 23
67582 Mettenheim
Germany.

Declares, that the product

Product Name: **HS series high voltage switches**
Model Number: **HS-2000**

Product Options: **This declaration covers all options of the above product(s)**

Conforms with the following European Directives:

The product herewith complies with the requirements of the:

1. Low Voltage Directive 73/73EEC;

2. EMC Directive 89/336/EEC (including 93/68/EEC) and carries the CE Marking accordingly

Date Of Issue _____

8. November 2018 **General Director**

www.stahl-electronics.com phone: +49 6242-9134266, fax: +49 32123 504884